BURLY BRAND
MOTORCYCLE ACCESSORIES

INSTALLATION INSTRUCTIONS
SOFTAIL BRAWLER KIT ADAPTER FOR ST STYLE BAGS

WARNINGS & ALERTS:

- READ AND FOLLOW ALL INSTRUCTIONS FOR PROPER INSTALLATION.
- IMPROPER INSTALLATION CAN CAUSE UNSATISFACTORY AND/OR UNSAFE OPERATION.
- READ ALL THE INSTRUCTIONS CAREFULLY BEFORE INSTALLING THIS KIT ON YOUR MOTORCYCLE. USE YOUR SERVICE MANUAL AS A REFERENCE WHILE INSTALLING THIS KIT.

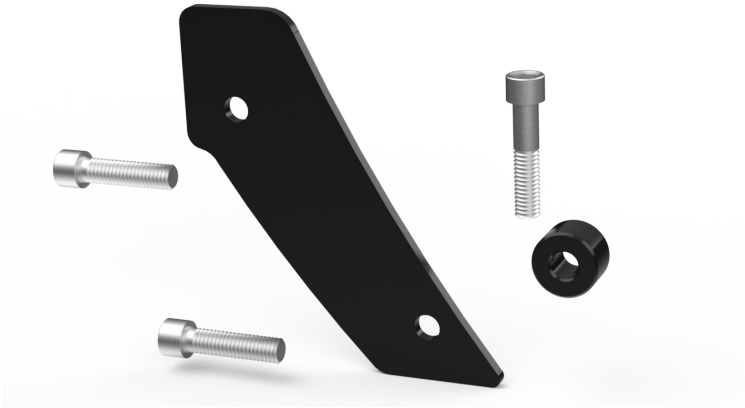

LEFT SIDE INSTALLATION

1. REMOVE LOWER OEM BAG MOUNT FROM LEFT SIDE OF MOTORCYCLE. INSTALL BRAWLER KIT PER INSTALLATION INSTRUCTIONS, DO NOT INSTALL LOWER BOLT ON LEFT SIDE REAR SLIDER MOUNT.
2. REMOVE STOCK ROUND BAG MOUNT FROM BRACKET AND MOUNT TO THE OPPOSITE SIDE OF BRACKET, APPLY THREADLOCK TO BOLT.
3. INSTALL NEW SPACER, OEM BAG MOUNT WITH BAG MOUNT FACING TOWARDS INSIDE, WASHER, AND NEW 1-3/4" BOLT (Figure 1).
4. ENSURE BRACKET IS ANGLED PROPERLY (Figure 2), APPLY THREAD LOCK AND TIGHTEN (40-45 ft/lbs)

RIGHT SIDE INSTALLATION

1. INSTALL COMPONENTS IN THE FOLLOWING ORDER: RIGHT WELDED ASSEMBLY/ROUND LOWER SPACER, THEN SPACER BRACKET PROVIDED IN THIS KIT, THEN THE STOCK MUFFLER BRACKET (Figure 3).
2. ENSURE TO USE THE LONGER SUPPLIED 3/8"-16 X 1-1/2" LONG BOLTS. TORQUE TO 40-45 FT-LBS



FIGURE 1

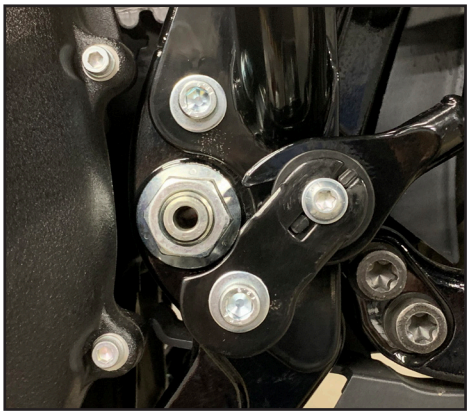

FIGURE 2

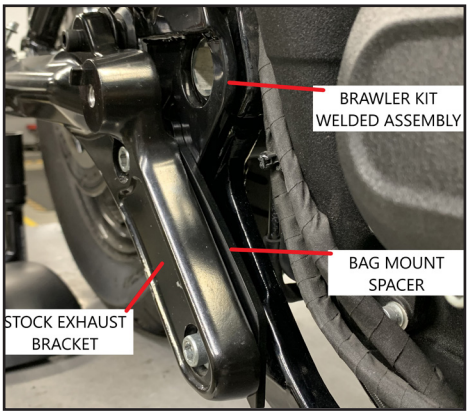

FIGURE 3

LIMITED GUARANTEE

We continually inspect and try to improve our products. All parts have been inspected prior to packaging, and our guarantee is limited to replacement of defective parts. This guarantee is in lieu of all guarantees or warranties implied or expressed. Because we can not control the application of our products, the buyer assumes risks for any and all damage caused by themselves or any third party, by virtue of failure of these parts. We make no warranty as to products distributed by us, expressed or implied, including without limitation, any warranties or merchant ability and fitness for particular purpose. We will, however, pass on all warranties made by the manufacturer, who has sole responsibility for performing such warranties. The manufacturer shall solely be responsible for any damage to person or property arising from design, manufacturing and testing of all products, and we accept no liability for such damages. We shall not be liable for indirect or consequential damages.